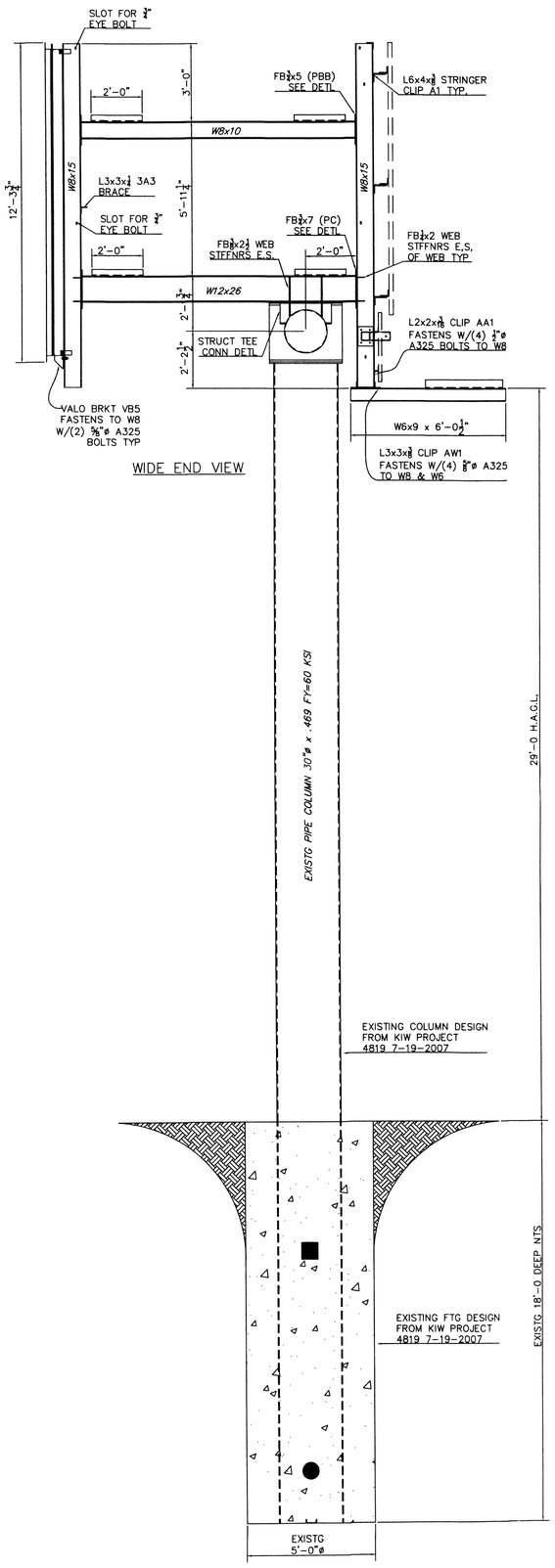

WIDE END VIEW

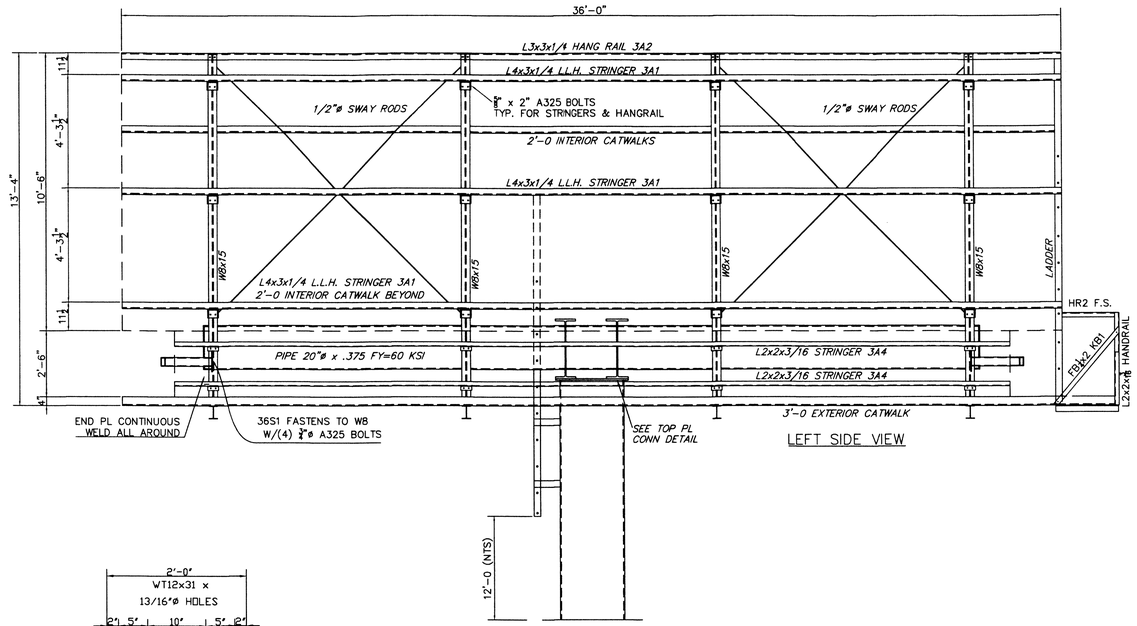

LEFT SIDE VIEW

GENERAL NOTES
1) ALL BOLTS SHALL BE A-490 & A-325. (UNLESS NOTED OTHERWISE)
2) ALL NUTS AND BOLTS TO BE DACROMENT COATED. (UNLESS NOTED OTHERWISE)
3) ALL STRUCTURAL STEEL WIDE FLANGE BEAMS SHALL CONFORM TO THE REQUIREMENTS A.S.T.M A-992. (UNLESS NOTED OTHERWISE)
4) ALL STEEL PIPE SHALL CONFORM TO THE REQUIREMENTS A.S.T.M. A-53 GRADE B. (UNLESS NOTED OTHERWISE)
5) ALL STEEL PLATE, ANGLES, CHANNELS, AND "S" SECTION SHALL CONFORM TO THE REQUIREMENTS OF A.S.T.M. A-36.
6) CONCRETE SHALL DEVELOP A MINIMUM COMPRESSIVE STRENGTH OF F'c=3,000 P.S.I.
7) ALL STRUCTURAL STEEL SHALL BE FABRICATED AND ERECTED ACCORDING TO THE LATEST A.I.S.C. SPECIFICATIONS AND CODE OF STANDARD PRACTICE.
8) ALL WELDING SHALL BE IN ACCORDANCE WITH A.W.S. STANDARDS. WELDING TO BE PERFORMED BY CERTIFIED WELDERS USING E-70 ELECTRODES.
9) STRUCTURAL STEEL TO BE SHOP PRIMED AND PAINTED. (UNLESS NOTED OTHERWISE)
10) ALL 3'-0 WIDE EXTERIOR WALKWAYS TO BE FRAMED WITH L4x3x1/4 AND HAVE 3# EXPANDED METAL GRATE. ALL 2'-0 WIDE CATWALKS TO HAVE 2# EXPANDED METAL GRATE.
11) CONCRETE REINFORCING STEEL SHALL CONFORM TO A.S.T.M. A-615 GRADE 60.
12) INSTALLER TO ENSURE THAT ALL WORK IS PERFORMED IN ACCORDANCE WITH FEDERAL, STATE & LOCAL CODES & ORDINANCES; AND O.S.H.A SAFETY REGULATIONS.
13) THE STRUCTURE IS DESIGNED IN ACCORDANCE TO THE 2015 INT'L BUILDING CODE, WINDSPEED OF 115 M.P.H. EXP. C, RISK CAT. II
14) DESIGN SOIL PRESSURE FOR 2500 P.S.F.
15) DESIGN TO SUPPORT ONE DAKTRONICS UNIT WEIGHING 3250# EACH.
16) FIELD TO ADD "LB1" BARS TO BOLT-ON LADDER STRINGERS BARS TO BE FIELD WELDED TO EXTENSION LADDER & TORSION PIPE FOR ADDED STABILITY.

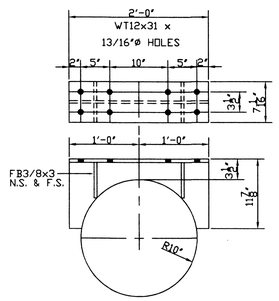

STRUCTURAL TEE DETAIL
8-3/4"ø A-490 BOLTS

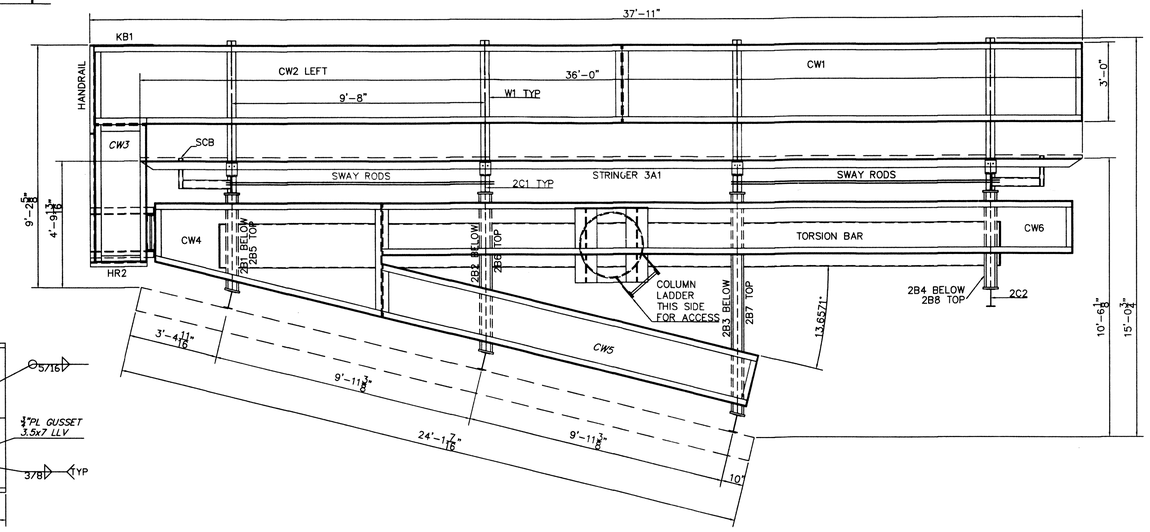

PLAN VIEW

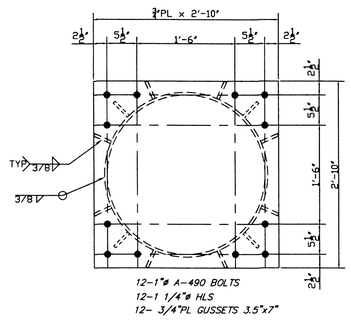

TOP PL CONN.
EXISTG CONN

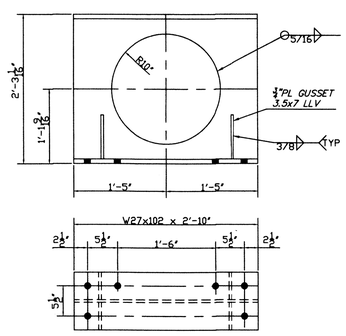

SADDLE DETAIL

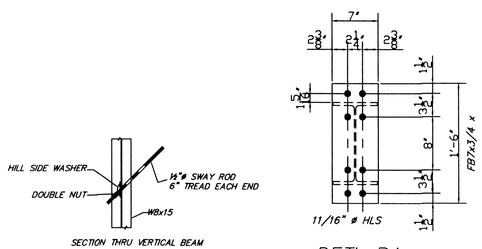

DETL PA
(8) 5/8"ø A-325 BOLTS

DETL PB
5/8"Ø A-325 BOLTS

SECTION THRU VERTICAL BEAM
SWAY ROD DETAIL

NO.	DESCRIPTION	BY	DATE
	REVISION		

KEELER IRON WORKS, INC.
Custom Steel Fabricators
1969 Harbor Ave.
Memphis, TN 38113
Ph. 800-526-6306 Fax 901-775-1576

LAMAR

LITTLE ROCK, AR

10'-6 x 36'-0 HALF "V" TO RIGHT CENTER MOUNT, 29'-0 H.A.G.L., 115 M.P.H. 12"X24" ON "V" SIDE, EXISTING COLUMN

Drwn AJW
Chkd
Scale 3/8"=1'-0
Date 5-9-19

BROUGH and STEPHENS, INC.
Consulting Engineers
MEMPHIS, TENNESSEE

FILE SD25IT3A
SHEET NO. E1 OF 1