SARAH'S CROSSING SUBDIVISION

SARAH'S CROSSING PHASE I

PRELIMINARY APPROVAL

JONESBORO, CRAIGHEAD COUNTY, ARKANSAS

LOCAL CONTACTS

CITY OF JONESBORO ENGINEERING DEPT.	870-932-2438
CITY OF JONESBORO PLANNING AND ZONING	870-932-0406
CITY, WATER, & LIGHT	870-935-5581
AT&T	1-800-464-7928
RITTER COMMUNICATIONS	870-336-3400
SUDDENLINK COMMUNICATIONS	870-935-3615
CENTER POINT ENERGY	870-972-6682

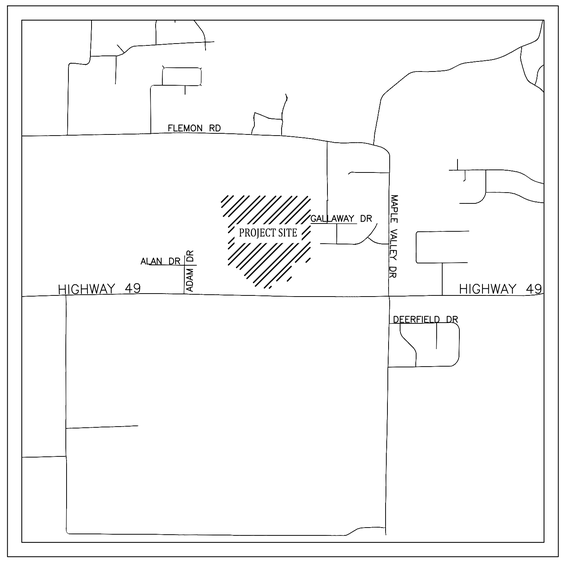

VICINITY MAP
(NOT TO SCALE)

NAD83 Arkansas State Planes, North Zone, US Foot

INDEX OF SHEETS

PAGE	DESCRIPTION
1	COVER PAGE
2	PLAT
3	KEY MAP
4	EXISTING TOPO
5	OVERALL UTILITY
6	GRADING & DRAINAGE
7	STREET PLAN & PROFILE
8	STREET PLAN & PROFILE
9	STREET DETAILS

MARK MORRIS P.E.
3221 SHELBY DRIVE
JONESBORO, AR 72404
TEL: 870-925-2759
MARK_D_MORRIS@YAHOO.COM

SARAH'S CROSSING PHASE I

COVER PAGE

STATE OF ARKANSAS REGISTERED PROFESSIONAL ENGINEER No. 13212 MARK B. MORRIS

REVISIONS

DATE	BY	DESCRIPTION

DRAWING INFO.

DRAWN BY:	GMD
DATE:	1/4/2018
SCALE:	1"=??'

SHEET NUMBER:
1 of 9

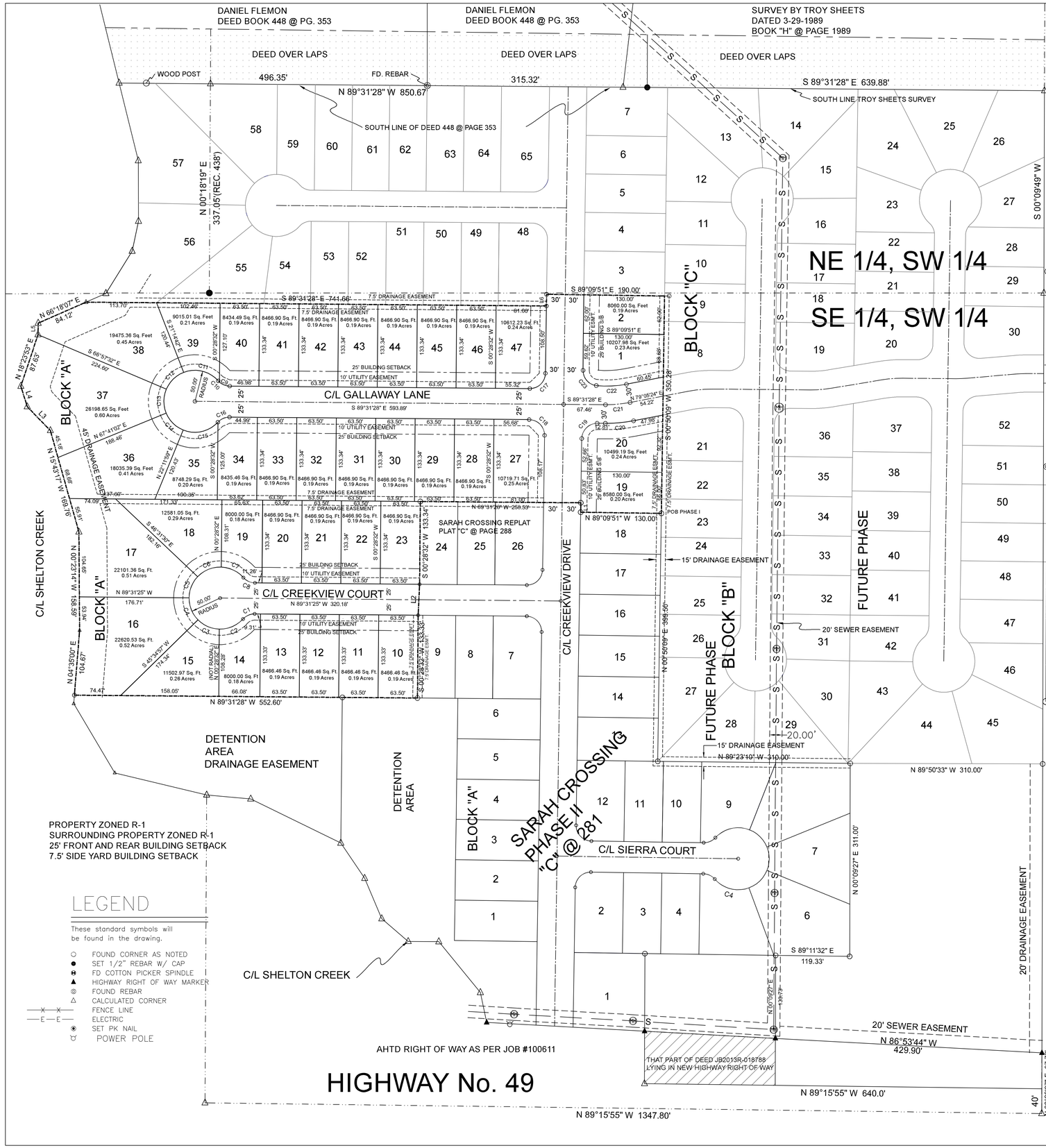

LINE	BEARING	DISTANCE
L1	N 00°50'09" E	115.17'
L2	S 02°43'11" W	50.04'
L3	N 44°05'01" W	53.59'
L4	N 17°16'10" W	34.44'
L5	N 00°38'56" E	18.51'
L6	N 00°50'09" E	18.81'

CURVE	ARC LENGTH	RADIUS	DELTA ANGLE	CHORD BEARING	CHORD LENGTH
C1	21.02'	25.00'	48°11'05"	S 66°23'00" W	20.41'
C2	42.92'	50.00'	49°11'14"	N 66°53'04" E	41.62'
C3	38.49'	50.00'	44°08'16"	S 66°28'11" E	37.55'
C4	39.18'	50.00'	44°53'38"	S 21°58'14" E	38.18'
C5	37.52'	50.00'	42°59'54"	S 21°58'32" W	36.65'
C6	42.55'	50.00'	48°45'34"	S 67°51'17" W	41.28'
C7	40.52'	50.00'	46°26'09"	N 64°32'52" W	39.42'
C8	21.03'	25.00'	48°11'41"	S 65°25'37" E	20.41'
C9	18.05'	25.00'	41°21'29"	S 68°50'46" E	17.66'
C10	2.98'	25.00'	6°49'57"	S 44°45'03" E	2.98'
C11	61.01'	50.00'	69°54'38"	S 76°17'23" E	57.29'
C12	39.89'	50.00'	45°42'51"	N 45°53'52" E	38.84'
C13	39.58'	50.00'	45°21'26"	N 00°21'44" E	38.56'
C14	39.69'	50.00'	45°29'02"	N 45°03'30" W	38.66'
C15	61.01'	50.00'	69°54'49"	S 77°14'35" W	57.30'
C16	21.03'	25.00'	48°11'22"	S 66°22'51" W	20.41'
C17	39.11'	25.00'	89°38'23"	N 45°39'21" E	35.24'
C18	39.43'	25.00'	90°21'37"	N 44°20'39" W	35.47'
C19	39.11'	25.00'	89°38'23"	S 45°39'21" W	35.24'
C20	45.70'	230.00'	11°23'08"	S 84°46'58" W	45.63'
C21	39.74'	200.00'	11°23'08"	N 84°46'58" E	39.68'
C22	48.93'	170.00'	16°29'33"	N 87°20'11" E	48.77'
C23	35.63'	24.51'	83°17'38"	S 40°48'40" E	32.58'

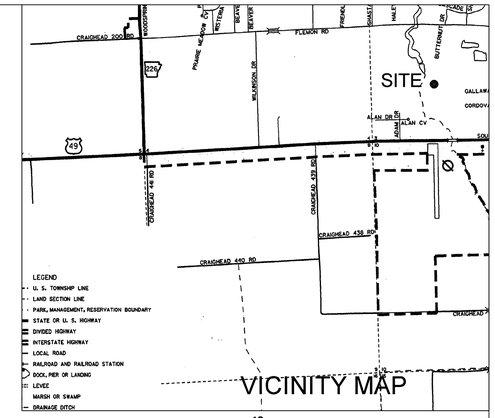

BEARINGS ARE NAD 83 SPC GRID BEARINGS
AS GPS OBSERVATION AND USGS TIES
ARKANSAS NORTH ZONE
CONVERGENCE ANGLE 0°43'30.53"
SCALE FACTOR-0.9999432

0 80 160 240

DESCRIPTION:
A PART OF THE SOUTHWEST QUARTER OF SECTION 3, TOWNSHIP 13 NORTH, RANGE 3 EAST, CRAIGHEAD COUNTY, ARKANSAS AND BEING MORE PARTICULARLY DESCRIBED AS FOLLOWS:
Commencing at the South Quarter corner of said Section 3; thence North 00°09'27" East 97.76 feet to the North right of way Highway No. 49; thence North 86°53'44" West 429.90 feet along said right of way; thence North 00°09'27" East 133.73 feet; thence South 89°11'32" East 119.33 feet; thence North 00°09'27" East 311.00 feet; thence North 89°23'10" West 310.00 feet; thence North 00°50'09" East 399.50 feet to the point of beginning proper;
thence North 89°09'51" West 130.00 feet; thence North 00°50'09" East 15.17 feet; thence North 89°31'28" West 258.53 feet; thence South 00°28'32" West 133.34 feet; thence South 02°43'11" West 50.04 feet; thence South 00°28'32" West 133.3 feet; thence North 89°31'28" West 552.60 feet to the center line of Shelton Creek; thence along said center line as follows: thence North 04°35'00" East 104.6 feet; thence North 00°23'14" West 158.59 feet; thence North 15°43'17" West 169.76 feet; thence North 44°05'01" West 53.59 feet ; thence North 17°16'10" West 34.44 feet; thence North 18°23'53" East 87.63 feet; thence North 00°38'56" East 18.51 feet; thence North 66°18'07" East 84.12 feet; thence leaving said center line South 89°31'28" East 741.66 feet; thence North 00°50'09" East 18.81 feet; thence South 89°09'51" East 190.00 feet; thence South 00°50'09" West 350.28 feet to the point of beginning proper, having an area of 494949.23 square feet, 11.36 acres more or less and being subject to all public and private roads and easements.

OWNER CERTIFICATION:
WE HEREBY CERTIFY THAT WE THE OWNERS OF THE PROPERTY SHOWN AND DESCRIBED HEREON AND THAT WE ADOPT THE PLAN OF THE SUBDIVISION AND DEDICATED PERPETUAL USE OF ALL STREETS AND EASEMENTS AS NOTED AND WE FURTHER CERTIFY
THAT WE HAVE READ AND ACKNOWLEDGED THE FOLLOWING STATEMENT.

MARK MORRIS DATE

SURVEYORS NOTES:
1. BEARINGS ARE ASSUMED ALONG EAST LINE AND ARE TO BE USE TO DEFINE THE GENERAL DIRECTION AND TRUE ANGLE AT THE INTERSECTION OF THE PROPERTY AND LAND LINES.
2. PROPERTY IS SUBJECT TO UTILITY SERVICES AND UNDERGROUND UTILITY LINES NOT LOCATED.
3. NO SEARCH OF THE PUBLIC RECORDS HAS BEEN MADE OF THIS SURVEYOR FOR EASEMENTS, RESTRICTIONS, RESERVATIONS OR RIGHT OF WAYS AFFECTING THIS PROPERTY WHICH A FULL TITLE SEARCH MAY DISCLOSE .

SURVEYOR'S CERTIFICATION:
THIS IS TO CERTIFY I HAVE ON THIS DATE SURVEYED THE ABOVE DESCRIBED PROPERTY IN ACCORDANCE WITH MONUMENTS FOUND THIS PLAT CONFORMS TO THAT SURVEYED.

H&S HIME PROFESSIONAL SURVEYING SERVICES
2619 CARAWAY RD. STE. " D"
JONESBORO, ARKANSAS 72401

H&S HIME PROFESSIONAL SURVEYING SERVICES
PHONE : 870-972-1288
EMAIL: hshime_butch@yahoo.com
2619 SO. CARAWAY RD. STE. "D"
JONESBORO, ARKANSAS

PRELIMINARY PLAT NOT FOR RECORD

SARAH CROSSING SUBDIVISION, PHASE 1
TO THE CITY OF JONESBORO, ARKANSAS,
A PART OF THE SOUTHWEST QUARTER OF SECTION 3,
TOWNSHIP 13 NORTH, RANGE 3 EAST, CRAIGHEAD COUNTY,
ARKANSAS

CLIENT: MARK MORRIS

DATE: 3-14-2018
REV:

DRAWN BY: H. HIME

CERTIFICATE OF AUTHORIZATION
H AND S HIME PROFESSIONAL SURVEYING SERVICES
No. 1432
ARKANSAS

HERBERT C. HIME
REGISTERED
STATE OF ARKANSAS
No. 1142
SIGNATURE
HERBERT C. HIME
PROFESSIONAL LAND SURVEYOR

PLS # 1142

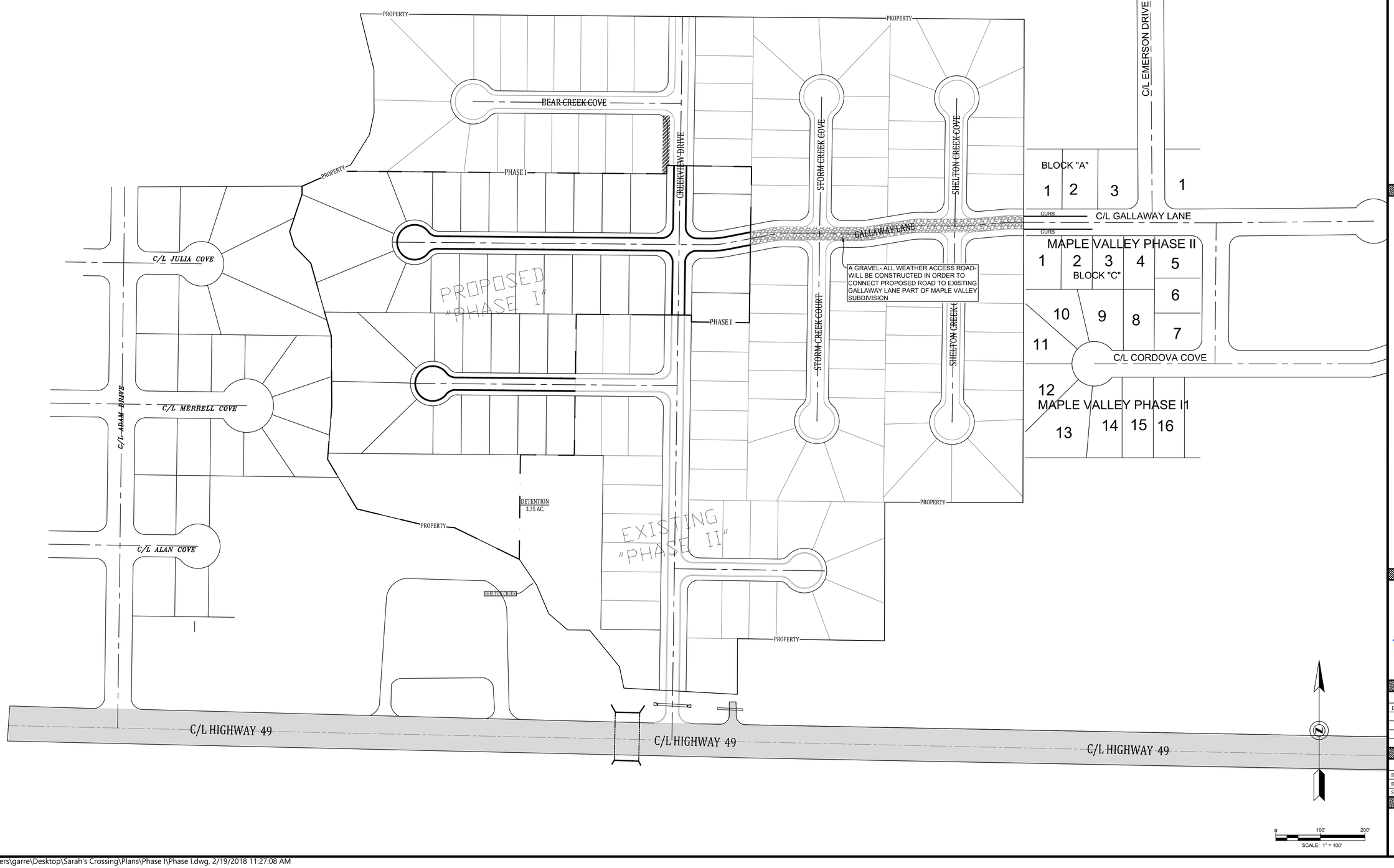

MARK MORRIS P.E.
3221 SHELBY DRIVE
JONESBORO, AR 72404
PH: 870-935-7200
MARK_B_MORRIS@YAHOO.COM

MARK MORRIS

SARAH'S CROSSING PHASE I

KEY MAP

STATE OF ARKANSAS
REGISTERED PROFESSIONAL ENGINEER
No. 13212
MARK B. MORRIS

REVISIONS

DATE	BY	DESCRIPTION

DRAWING INFO.

DRAWN BY:	GMD
DATE:	1/4/2018
SCALE:	1"=50'

SHEET NUMBER:
3 of 9

C:\Users\garre\Desktop\Sarah's Crossing\Plans\Phase I\Phase I.dwg, 2/19/2018 11:27:08 AM

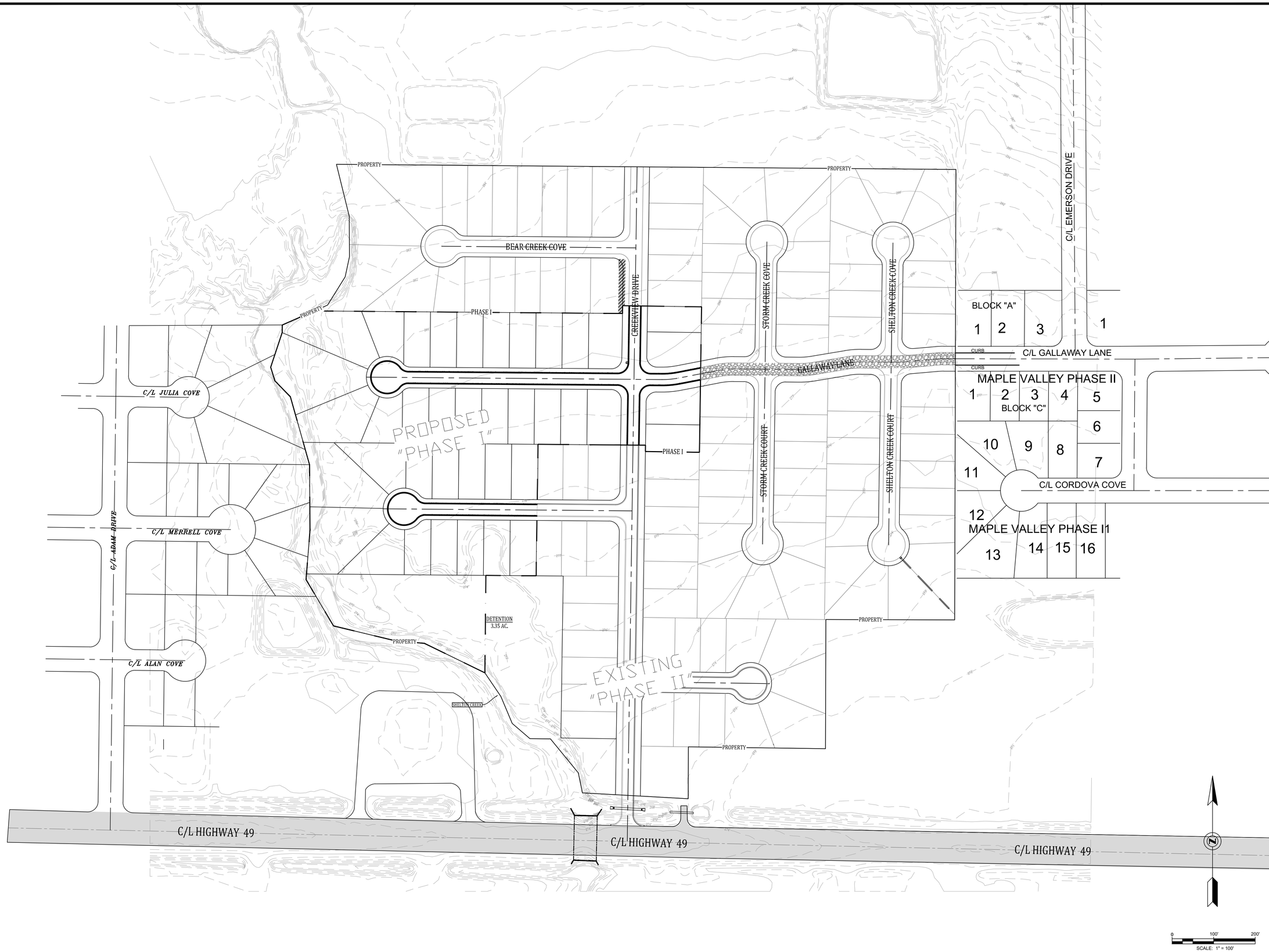

MARK MORRIS P.E.
3221 SHELBY DRIVE
JONESBORO, AR 72404
PH: 870-935-7200
MARK_B_MORRIS@YAHOO.COM

MARK MORRIS

SARAH'S CROSSING PHASE I

EXISTING TOPOGRAPHY

STATE OF ARKANSAS
REGISTERED PROFESSIONAL ENGINEER
No. 13212
MARK B. MORRIS

REVISIONS		
DATE	BY	DESCRIPTION

DRAWING INFO.	
DRAWN BY:	GMD
DATE:	1/4/2018
SCALE:	1"=50'

SHEET NUMBER:
4 of 9

C:\Users\garre\Desktop\Sarah's Crossing\Plans\Phase I\Phase I.dwg, 2/19/2018 11:27:37 AM

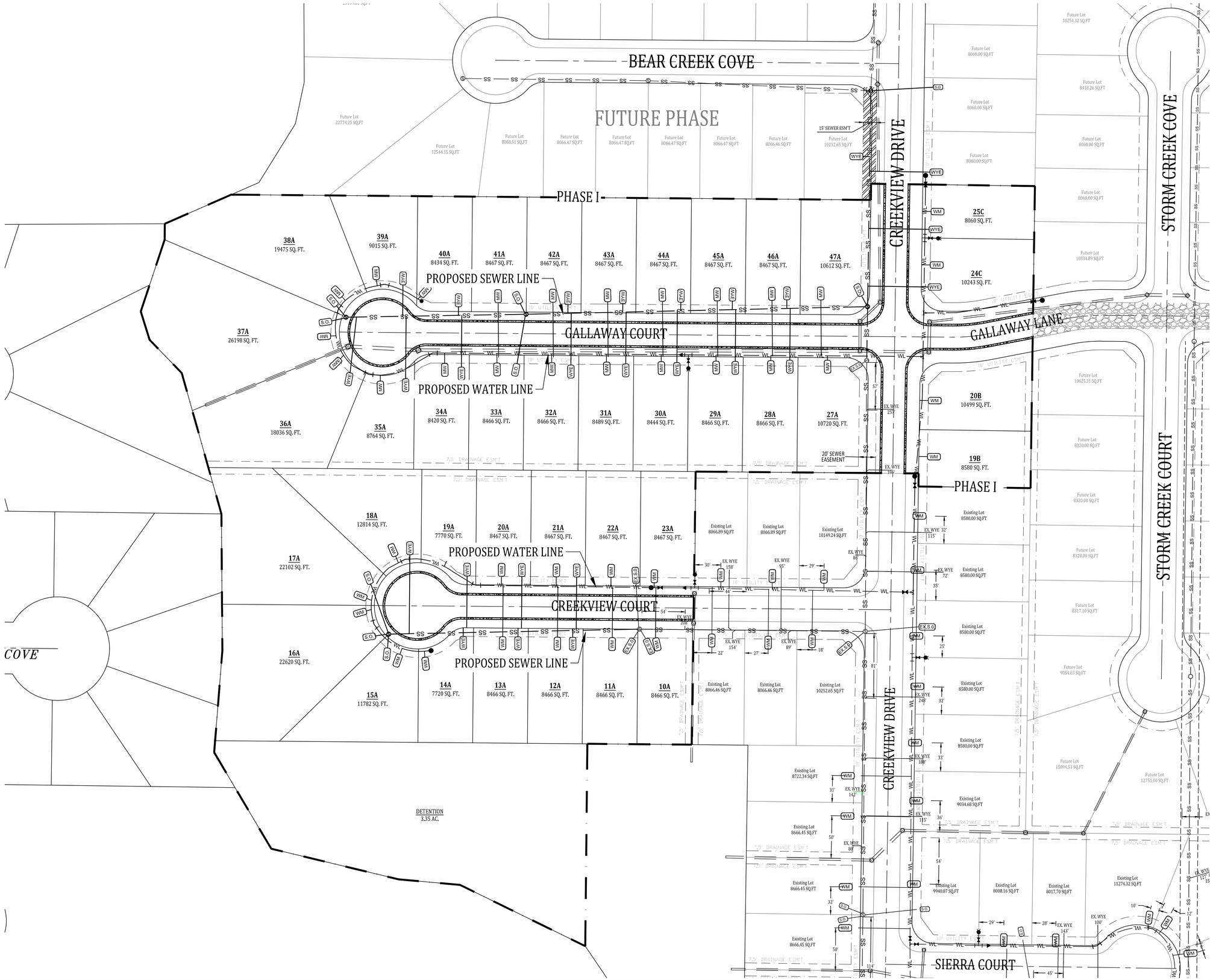

MARK MORRIS P.E.
3221 SHELBY DRIVE
JONESBORO, AR 72404
PH: 870-243-7200
MARK_B_MORRIS@YAHOO.COM

SARAH'S CROSSING PHASE I

OVERALL UTILITY

STATE OF ARKANSAS
REGISTERED PROFESSIONAL ENGINEER
No. 13212
MARK B. MORRIS

REVISIONS		
DATE	BY	DESCRIPTION

DRAWING INFO.	
DRAWN BY:	GMD
DATE:	1/5/2018
SCALE:	1"=50'

SHEET NUMBER:
5 of 9

C:\Users\garre\Desktop\Sarah's Crossing\Plans\Phase I\Phase I.dwg, 3/14/2018 1:11:05 PM

LEGEND

- CURB
- SANITARY SEWER
- WATER LINE
- FIRE HYDRANT
- SEWER MANHOLE
- STORM DRAIN INLET
- STORM DRAIN PIPE
- WATER METER
- SEWER WYE
- SEWER STUB- OUT
- EX. SEWER WYE
- EX. SEWER STUB- OUT
- BLOW-OFF ASSEMBLY
- GATE VALVE

ARKANSAS ONE-CALL SYSTEM, INC.
1-800-482-8998 OR 811

SCALE: 1" = 50'

MARK MORRIS P.E.
3221 SHELBY DRIVE
JONESBORO, AR 72404
PH: 870-935-7200
MARK_B_MORRIS@YAHOO.COM

SARAH'S CROSSING PHASE I

GRADING & DRAINAGE

STATE OF ARKANSAS
REGISTERED PROFESSIONAL ENGINEER
No. 13212
MARK B. MORRIS

REVISIONS

DATE	BY	DESCRIPTION

DRAWING INFO.

DRAWN BY:	GMD
DATE:	1/4/2018
SCALE:	1"=50'

SHEET NUMBER:
6 of 9

C:\Users\garre\Desktop\Sarah's Crossing\Plans\Phase I\Phase I.dwg, 3/14/2018 1:18:31 PM

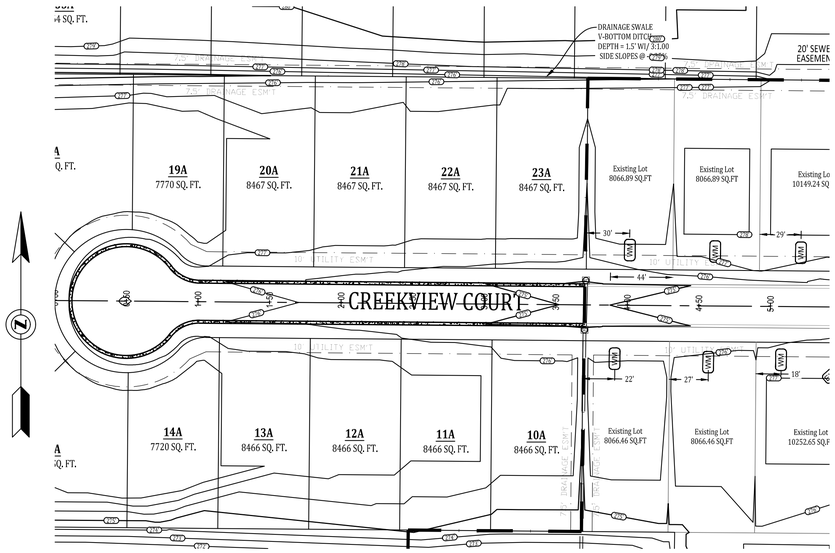

CREEKVIEW COURT

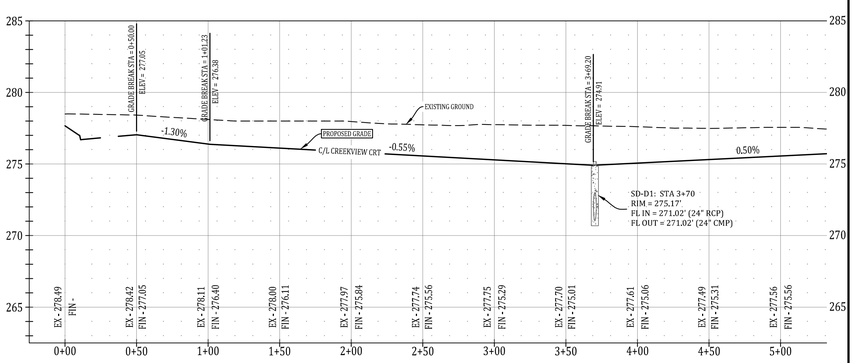

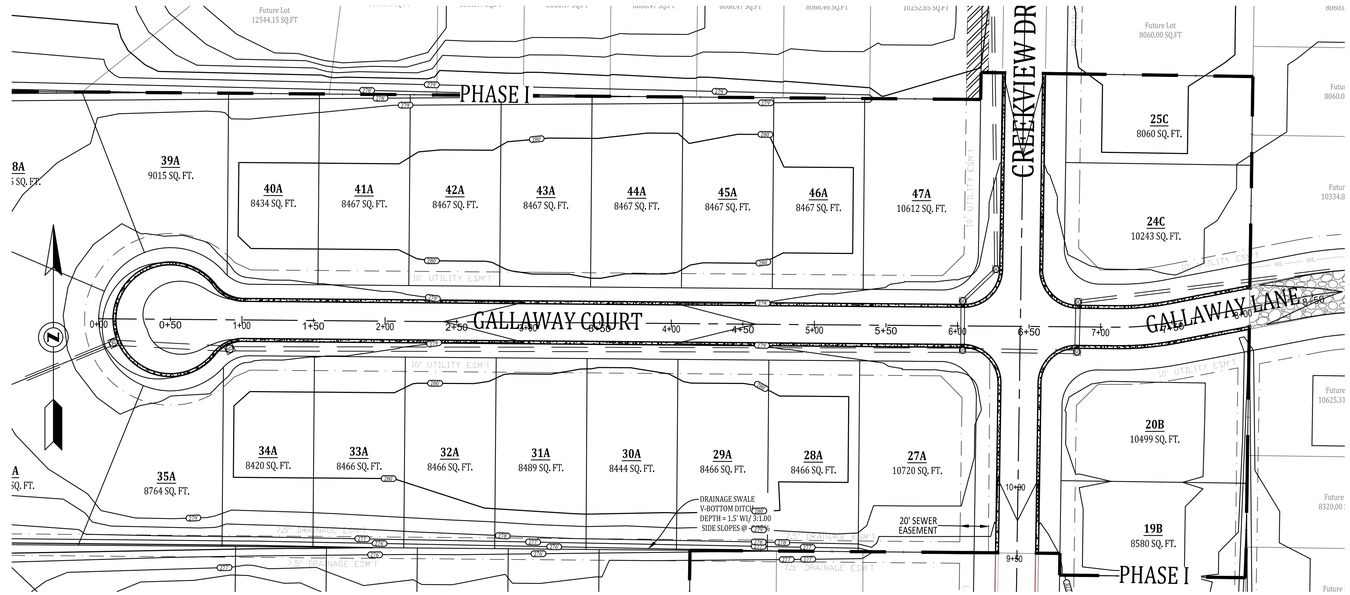

GALLAWAY COURT

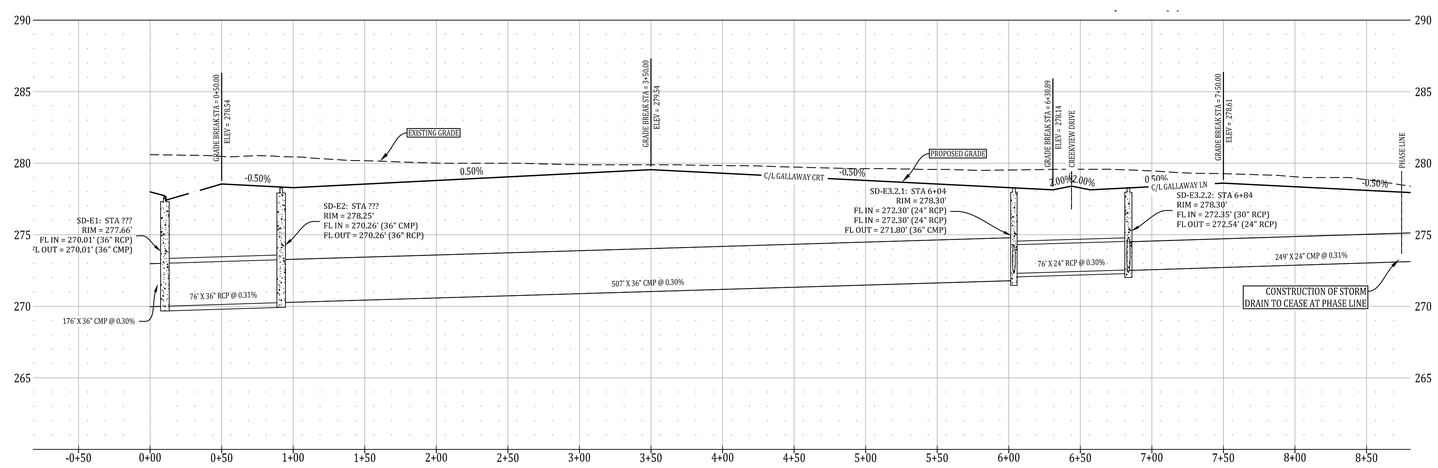

VERTICAL SCALE 1:10
HORIZONTAL SCALE 1:50

0 50' 100'
SCALE: 1" = 50'

MARK MORRIS P.E.
3221 SHELBY DRIVE
PINE BLUFF, AR 71604
PH: 870-247-7204
MARK_B_MORRIS@YAHOO.COM

MARK MORRIS

SARAH'S CROSSING PHASE I

STREET PLAN & PROFILE

STATE OF ARKANSAS
REGISTERED PROFESSIONAL ENGINEER
No. 13212
MARK B. MORRIS

REVISIONS

DATE	BY	DESCRIPTION

DRAWING INFO.

DRAWN BY:	GMD
DATE:	1/4/2018
SCALE:	1"=50'

SHEET NUMBER:
7 of 9

CREEKVIEW DRIVE

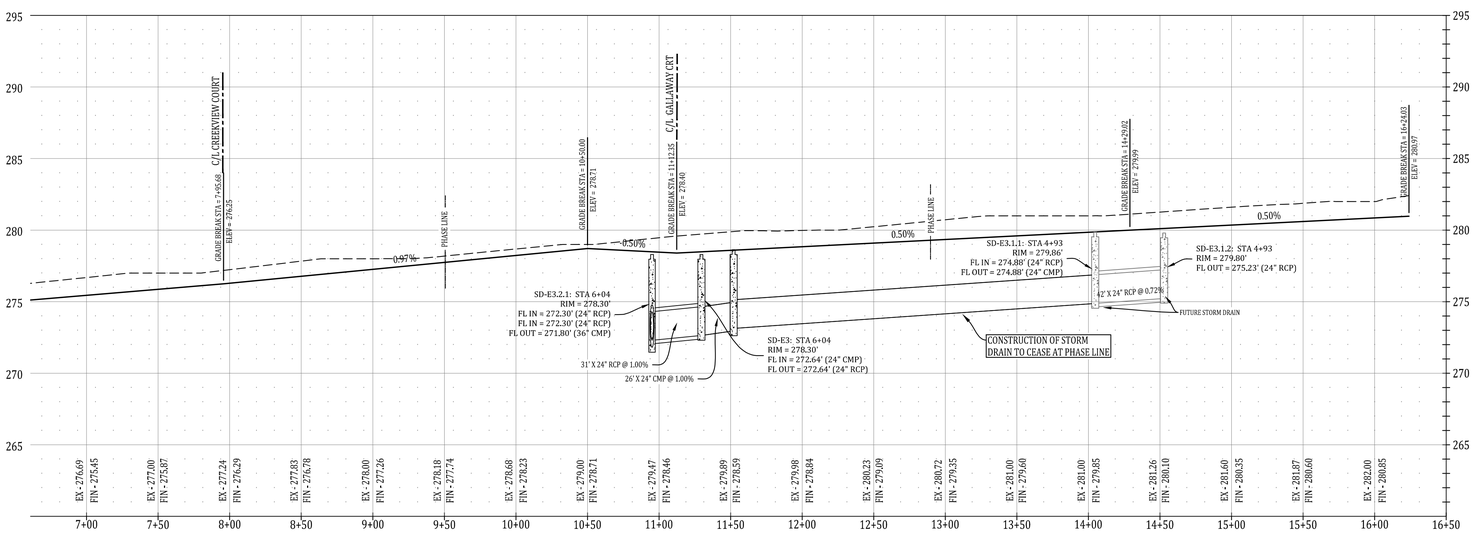

VERTICAL SCALE 1:10
HORIZONTAL SCALE 1:50

0 50' 100'
SCALE: 1" = 50'

MARK MORRIS P.E.
3221 SHELBY DRIVE
JONESBORO, AR 72404
PH: 870-935-7200
MARK_B_MORRIS@YAHOO.COM

SARAH'S CROSSING PHASE I

STREET PLAN & PROFILE

STATE OF ARKANSAS
REGISTERED PROFESSIONAL ENGINEER
No. 13212
MARK B. MORRIS

REVISIONS		
DATE	BY	DESCRIPTION

DRAWING INFO.	
DRAWN BY:	GMD
DATE:	1/4/2018
SCALE:	1"=50'

SHEET NUMBER:
8 of 9

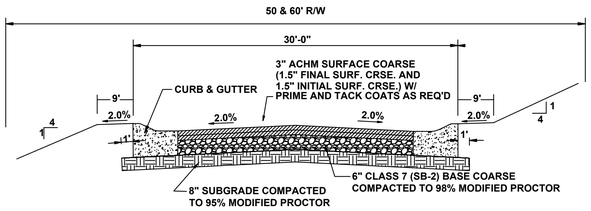

TYPICAL SECTION - INTERIOR STREETS

N.T.S.

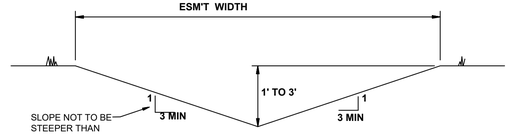

'A' TYPICAL DITCH DETAIL

N.T.S.

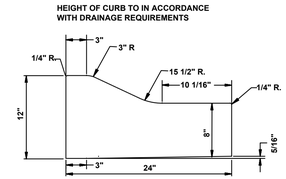

TYPE 'B' CURB & GUTTER

N.T.S.

NOTE: CONTRACTION AND EXPANSION JOINTS SHALL BE CONSTRUCTED IN ACCORDANCE WITH THE CITY OF JONESBORO SPECIFICATIONS

NO DRIVEWAY CUTS ALLOWED WITH THIS TYPE OF CURB

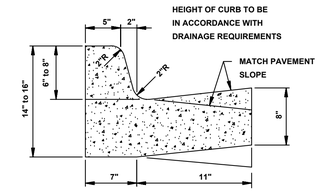

TYPE "A-18" (BARRIER) ARTERIAL STREETS

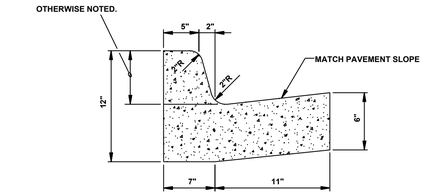

TYPE "A-18" (BARRIER) RESIDENTIAL & COLLECTOR STREETS

COMBINATION CURB & GUTTER

N.T.S.

NOTE: CONTRACTION AND EXPANSION JOINTS SHALL BE CONSTRUCTED IN ACCORDANCE WITH THE PLANS AND SPECIFICATIONS.

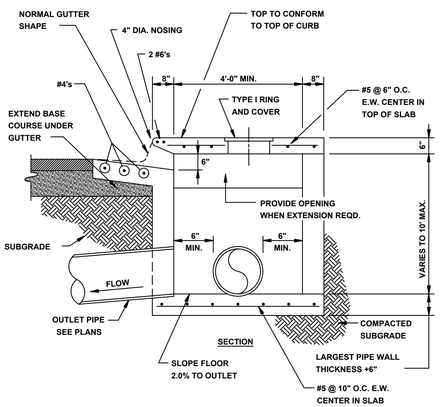

NOTE:
INLETS MORE THAN 3'-0" DEEP SHALL HAVE STANDARD MANHOLE STEPS PLACED AT 15" O.C. - MANHOLE FRAME AND COVER SHALL BE PLACED ADJACENT TO THE WALL WITH THE STEPS.

SECTION - CIRCULAR CURB INLET

N.T.S.

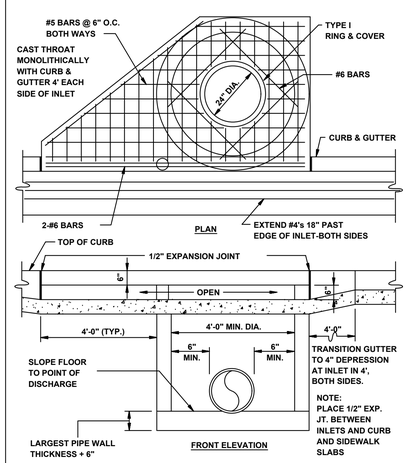

CIRCULAR CURB INLET W/ INLET EXTENSION

N.T.S.

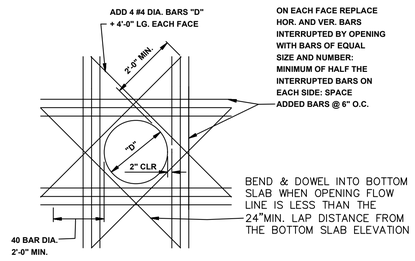

ADDED REINFORCEMENT AT ROUND OPENING IN WALL OR SLAB

N.T.S.

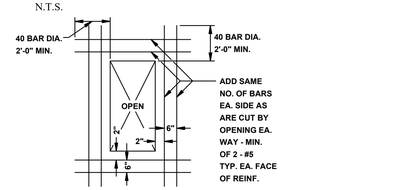

ADDED REINFORCEMENT AT RECTANGULAR OPENING IN WALL OR SLAB

N.T.S.

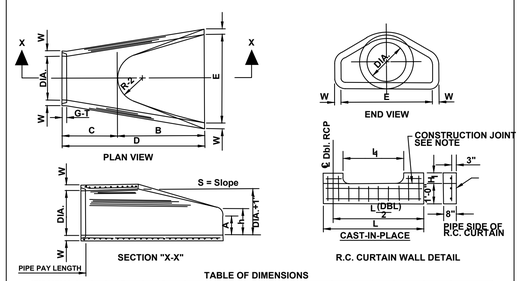

TABLE OF DIMENSIONS

DIA.	WALL	A	B	C	D	E	S	DIA.*1"	P	R-1	R-2	Q-T	Wt	h
18"	2 1/2"	9"	2'-5"	3'-10"	6'-1"	3'-0"	3:1	18"	29"	15 1/2"	12"	2"	1000	1'-0 1/2"
24"	3"	9 1/2"	3'-3 1/2"	2'-4"	6'-1 1/2"	4'-0"	3:1	25"	33 3/16"	16 13/16"	14"	2 1/2"	1600	1'-1 1/2"
30"	3 1/2"	1'-0"	4'-6"	1'-7 3/4"	6'-1 3/4"	5'-0"	3:1	31"	37"	18 1/2"	15"	3 1/4"	1945	1'-4 5/8"
36"	4"	1'-3"	5'-3"	2'-10 3/4"	8'-1 3/4"	6'-0"	3:1	37"	47 13/16"	24 5/16"	20"	3 1/2"	4100	1'-9"
42"	4 1/2"	1'-9"	5'-3"	2'-11"	8'-2"	6'-6"	3:1	43"	53 7/8"	27 1/2"	22"	3 1/2"	5350	2'-2 1/2"
48"	5"	2'-0"	6'-0"	2'-2"	8'-2"	7'-0"	3:1	49"	56 1/2"	28 1/2"	22"	3 1/2"	6550	2'-6"
54"	5 1/2"	2'-4"	6'-6"	1'-10"	8'-4"	7'-6"	3:1	55"	65 1/2"	33 1/8"	24"	4"	8760	2'-10 1/2"
60"	6"	2'-10"	6'-6"	1'-10"	8'-4"	8'-0"	3:1	61"	72 1/2"	36 11/16"	24"	4"	9270	3'-3"
72"	7"	3'-10"	6'-6"	1'-10"	8'-4"	9'-0"	3:1	73"	77 13/16"	38 15/16"	24"	5"	13250	4'-6"

NOTES:
1. The portion of the R.C. Curtain Wall beneath the Flared End Section (Lower 1'-0") shall be placed monolithically. The Flared End Section shall then be set in place and the remaining portions of the R.C. Curtain Wall placed.
2. All reinforcing steel are #4 Bars at 6" O.C.
3. No separate payment will be made for the Curtain Walls. They shall be considered subsidiary to the Flared End Sections.
4. Tongue End On Upstream Section. Groove End On Downstream Section.

FLARED END SECTION DETAIL FOR REINFORCED CONCRETE PIPE CULVERT

N.T.S.

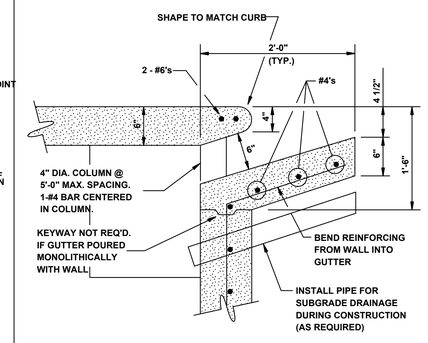

CURB OPENING

N.T.S.

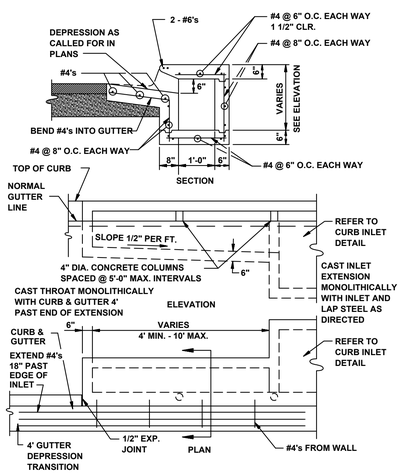

RECTANGULAR CURB INLET EXTENSION

N.T.S.

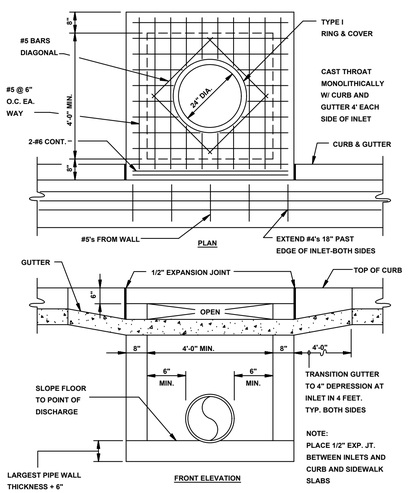

RECTANGULAR CURB INLET

N.T.S.

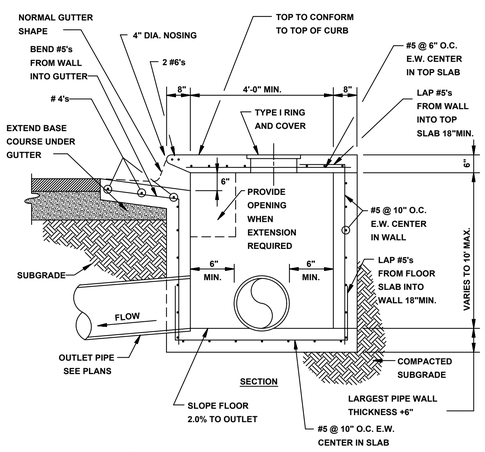

NOTE:
INLETS MORE THAN 3'-0" DEEP SHALL HAVE STANDARD MANHOLE STEPS PLACED AT 15" O.C. - MANHOLE FRAME AND COVER SHALL BE PLACED ADJACENT TO THE WALL WITH THE STEPS.

SECTION - TYPICAL CURB INLET - TYPE 'A'

N.T.S.

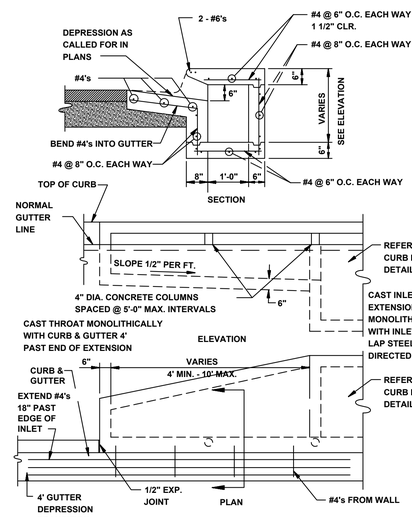

ALTERNATE CURB INLET EXTENSION

N.T.S.

APPROXIMATE WEIGHTS
RING - 63 LBS
COVER - 62 LBS

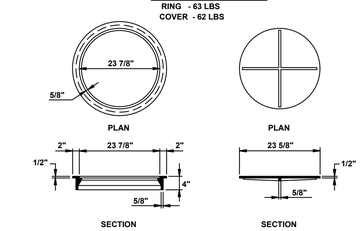

TYPE I RING & COVER

N.T.S.

NOTE:
TYPE I FRAME AND COVER PERMITTED ONLY ON STRUCTURES NOT SUBJECT TO VEHICULAR TRAFFIC.

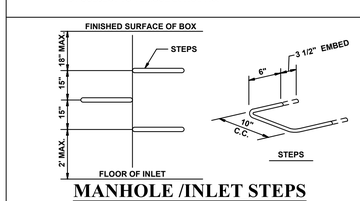

MANHOLE /INLET STEPS

N.T.S.

STEPS SPECIFICATIONS:
A. MANHOLE STEPS: CORROSION RESISTANT, COATED AND REINFORCED WITH STEEL PER ASTM C-478. STEEL REINFORCING MINIMUM 1/2" DIAMETER.
B. CAPABLE OF SUPPORTING MINIMUM 300 lb. LOAD.
C. NON-SLIP TEXTURED TREADS
D. REQUIRED IN ALL STRUCTURES 3'-0" DEEP OR DEEPER, UNLESS SPECIFIED OTHERWISE.

MARK MORRIS P.E.
3221 SHELBY DRIVE
JONESBORO, AR 72404
PH: 870-934-2780
MARK_B_MORRIS@YAHOO.COM

MARK MORRIS

SARAH'S CROSSING PHASE I

STREET DETAILS

STATE OF ARKANSAS
REGISTERED PROFESSIONAL ENGINEER
No. 13212
MARK B. MORRIS

REVISIONS

DATE	BY	DESCRIPTION

DRAWING INFO.

DRAWN BY:	GMD
DATE:	1/4/2018
SCALE:	1"=7?'

SHEET NUMBER:
9 of 9